Press Release

12/4/2016

New range of self-aligning brackets

ELESA has recently introduced the new range of self-aligning brackets used to fasten rotating shafts. They are available in square flanged (**UCF**), oval flanged (**UCFL**), side flanged (**UCFB**) or for shafts at 90° (**UCP**).

The brackets are composed of a polyamide based technopolymer base that ensures maximum mechanical and heat resistance, AISI 304 stainless steel bushings and washers, and chrome steel bearings with static capacity from 7,000N to 11,000N and dynamic capacity from 14,000N to 19,000N.

The cap in polypropylene based technopolymer, grey colour, is available in two standard executions: closed, for head bracket, or opened, for pass-through shafts.

Overall dimensions are in compliance with ISO 3228.

A system of NBR rubber packing rings assures the protection of the bearing from the entry of dirt, humidity, water and steam during cleaning cycles, avoiding the deposit of contamination preserving the functioning even in environments subject to aggression from the external environment.

On request, special executions are available:

- AISI 440C stainless steel bearing for a high corrosion resistance
- brackets for shafts with diameters in different sizes
- brackets in antibacterial material or in polypropylene based technopolymer, packing rings and oil seal type VITON®*

Products technical data sheets, along with drawings and tables with codes and dimensions, are available on our website www.elesa.com.

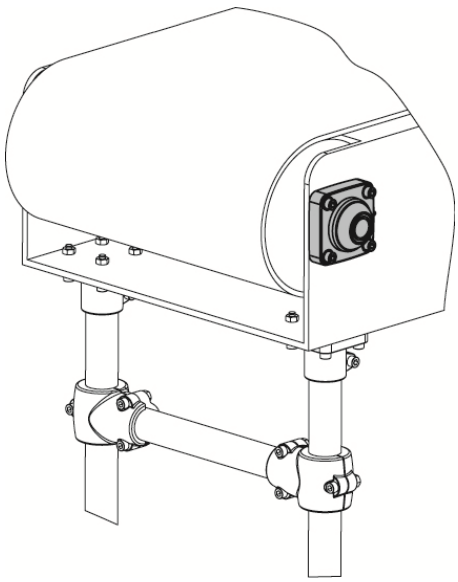

* Registered trademark by DuPont Dow Elastomers

Press Box

Contact: Fabio Invernizzi
E-mail: fabio.invernizzi@elesa.com

ELESA S.p.A.
Via Pompei, 29 - 20900 Monza (MB) Italia
tel. +39 039 2811.1 - info@elesa.com

1941 - 2016 75 Elesa Anniversary

www.elesa.com
STANDARD MACHINE ELEMENTS WORLDWIDE

elesa®